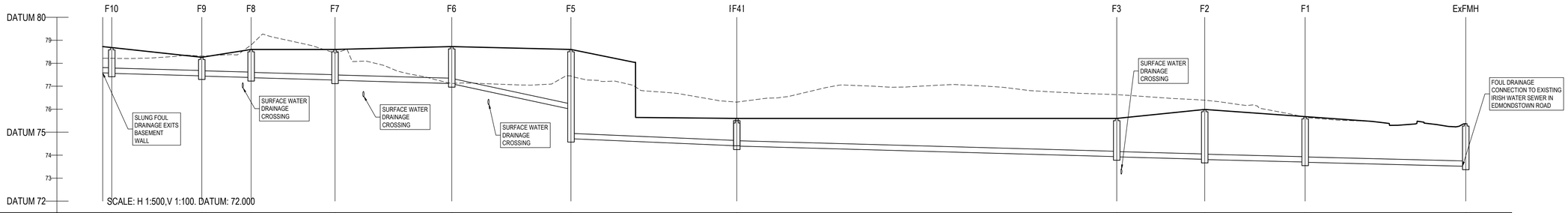

COVER LEVEL		78.683	78.261	78.600	78.600	78.724	78.600	75.600	75.600	75.990	75.678	75.388	
INVERT LEVEL	77.556 77.554	77.564	77.455 77.445	77.395 77.375	77.273 77.263	77.121 77.111	76.000 74.719	74.410 74.400	73.939 73.929	73.823 73.813	73.704 73.694	73.519	
DEPTH (m)		1.119	0.816	1.225	1.337	1.613	3.881	0.900	1.671	2.177	1.984	1.849	
DISTANCE (m)	1.97	19.63	10.77	18.29	25.47	25.99	36.17	82.87		19.19	21.90	35.03	
PIPE SLOPE	1:179	1:180	1:179	1:179	1:179	1:23	1:117	1:180		1:181	1:201	1:200	
PIPE SIZE	225mm	225mm	225mm	225mm	225mm	225mm	225mm	225mm		225mm	225mm	225mm	

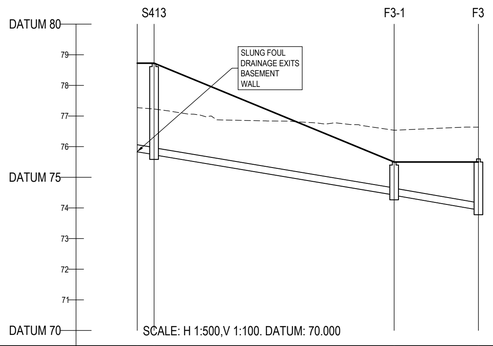

COVER LEVEL		78.712	75.500	75.600
INVERT LEVEL	75.834 75.145	75.135	74.425 74.415	73.939
DEPTH (m)		2.977	1.085	1.671
DISTANCE (m)	2.74	39.20	13.75	
PIPE SLOPE	1:31	1:30	1:29	
PIPE SIZE	225mm	225mm	225mm	

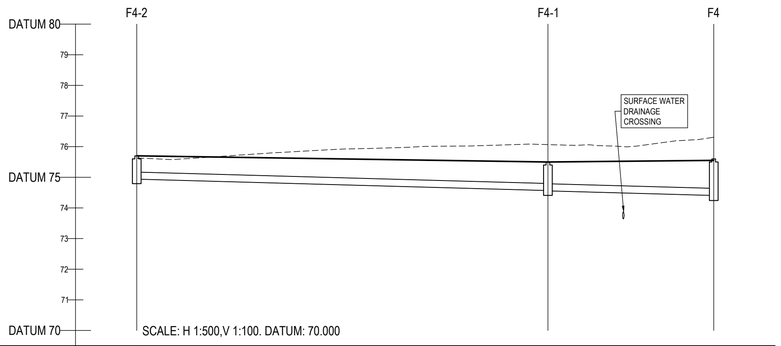

COVER LEVEL		75.700	75.500	75.600
INVERT LEVEL		74.942	74.570 74.560	74.410
DEPTH (m)		0.758	0.940	1.207
DISTANCE (m)		67.12	27.07	
PIPE SLOPE		1:180	1:180	
PIPE SIZE		225mm	225mm	

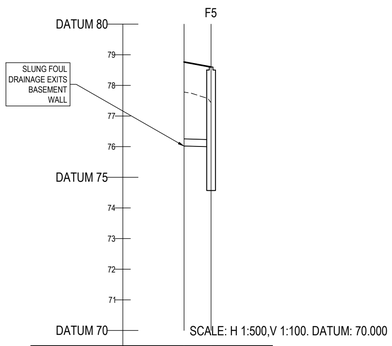

COVER LEVEL		78.600	
INVERT LEVEL		76.025 76.000	
DEPTH (m)		3.881	
DISTANCE (m)		4.41	
PIPE SLOPE		1:177	
PIPE SIZE		225mm	

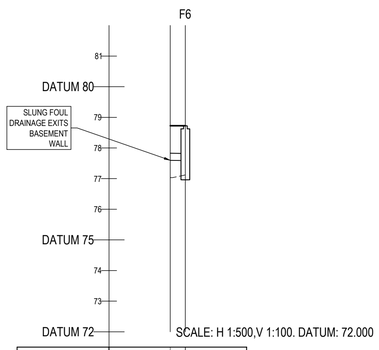

COVER LEVEL		78.724	
INVERT LEVEL	77.601 77.591		
DEPTH (m)		1.613	
DISTANCE (m)	2.47		
PIPE SLOPE	1:274		
PIPE SIZE	225mm		

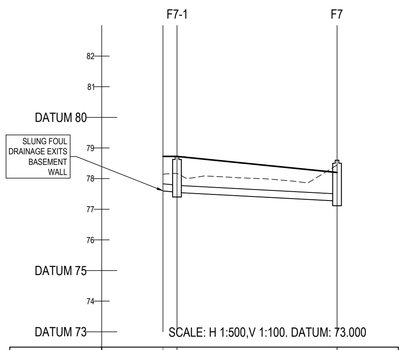

COVER LEVEL		78.726	78.600
INVERT LEVEL	77.600 77.590	77.550	77.273
DEPTH (m)		1.176	1.337
DISTANCE (m)	2.29	26.13	
PIPE SLOPE	1:57	1:94	
PIPE SIZE	225mm	225mm	

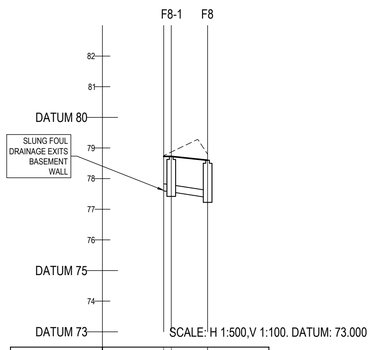

COVER LEVEL		78.725	78.600
INVERT LEVEL	77.600 77.575	77.568	77.395
DEPTH (m)		1.157	1.225
DISTANCE (m)	1.24	5.94	
PIPE SLOPE	1:56	1:32	
PIPE SIZE	225mm	225mm	

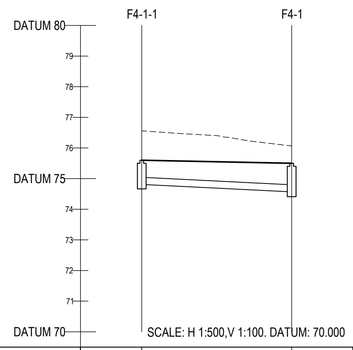

COVER LEVEL		75.600	75.500
INVERT LEVEL		74.814	74.570
DEPTH (m)		0.786	0.940
DISTANCE (m)		24.48	
PIPE SLOPE		1:100	
PIPE SIZE		225mm	

ON ORIGINAL

0 5 10 20 30 40 50mm

© COPYRIGHT OF THIS DRAWING IS RESERVED BY DBFL CONSULTING ENGINEERS. NO PART SHALL BE REPRODUCED OR TRANSMITTED WITHOUT THEIR WRITTEN PERMISSION.

NO CHANGES OF WHATSOEVER NATURE ARE TO BE MADE TO ANY DETAILS SET OUT OR CONTAINED IN ANY DBFL SPECIFICATIONS OR DRAWINGS UNLESS THE EXPRESS CONSENT HAS BEEN OBTAINED IN ADVANCE, IN WRITING, FROM DBFL

NOTES:

1. ALL DRAWINGS TO BE CHECKED BY CONTRACTOR ON SITE AND ENGINEER INFORMED OF DISCREPANCIES BEFORE WORK COMMENCES
2. ALL LEVELS ARE IN METRES AND ARE RELATED TO ORDNANCE DATUM
3. CONTRACTOR SHALL SATISFY HIMSELF AS TO THE ACCURACY OF PAVEMENT LEVELS ON SITE PRIOR TO COMMENCEMENT OF WORKS ON SITE
4. ALL WORKS TO BE CONSTRUCTED IN ACCORDANCE WITH THE NRA SPECIFICATION FOR ROAD WORKS UNLESS NOTED OTHERWISE
5. THIS DRAWING IS FOR PLANNING PURPOSES ONLY
6. MANHOLE COVER LEVELS ARE TO CONFORM WITH FINISHED ROAD AND PATH LEVELS
7. WHERE COVER TO PIPE IS LESS THAN 1200mm (ROAD/PATH/VERGE) OR 900mm (OPEN SPACE) SURROUND PIPE IN MINIMUM 150mm CONCRETE

KEY

EXISTING GROUND PROFILE
PROPOSED GROUND PROFILE

rev	date	description	by	chkd.
1	29-03-23	ISSUED FOR PLANNING	BS	NJF
0	30-09-22	ISSUED FOR STAGE 2 PRE-PLANNING	BS	NJF

STATUS CODES

purpose	acceptance
P3 - PLANNING PERMISSION	S - ISSUED

DBFL Consulting Engineers
Civil, Structural & Transportation Engineering
www.dbfl.ie

DUBLIN OFFICE: Ormond House, Upper Ormond Quay, Dublin 7, D07 W704
PHONE +353 1 400 4000

CORK OFFICE: 14 South Mall, Cork, T12 CT91
PHONE +353 21 2024538

WATERFORD OFFICE: Suite 8b The Atrium, Maritana Gate, Canada Street, Waterford, X91 W028
PHONE +353 51 309 500

project ref.

SITE AT TAYLORS LANE, BALLYBODEN, DUBLIN 16

drawing title

FOUL DRAINAGE LONGITUDINAL SECTIONS

client

SHANNON HOMES DUBLIN UNLIMITED COMPANY

designed by	author	scale	sheet size
GK	BS	AS SHOWN	A1

drawing no.	revision
190068-X-92-Z00-XXX-DR-DBFL-CE-3501	1